How to use your calipers:

Calipers are used to measure dimensions of objects. They can provide more precision than the average ruler because they eliminate parallax. (figure 1)

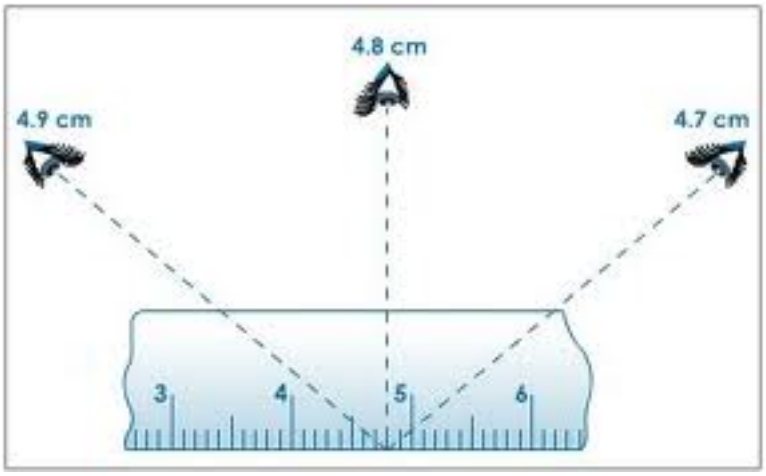

figure 1

The calipers are comprised of a calibrated scale with a fixed jaw, and another jaw, with a pointer, that slides along the scale.

The simplest method is to read the position of the pointer directly on the scale. When the pointer is between two markings, the user can mentally interpolate to improve the precision of the reading. This would be a simple calibrated caliper; but the addition of a vernier scale allows more accurate interpolation, and is the universal practice; this is the **vernier caliper**.

The vernier scales may include metric measurements on the lower part of the scale and inch measurements on the upper, or vice versa, in countries measurement that use inches. Vernier calipers commonly used in industry provide a precision to 0.01 mm (10 micrometers), or one thousandth of an inch. (72 in).[7]

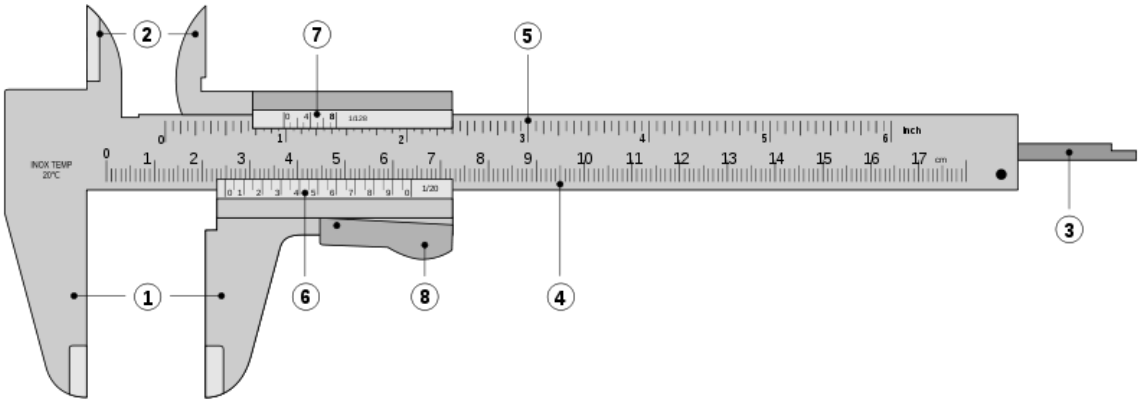

[1]

Parts of a vernier caliper:

1. **Outside jaws**: used to measure external diameter or width of an object
2. **Inside jaws**: used to measure internal diameter of an object
3. **Depth probe**: used to measure depths of an object or a hole
4. **Main scale**: scale marked every mm
5. **Main scale**: scale marked in inches and fractions
6. **Vernier scale** gives interpolated measurements to 0.1 mm or better
7. **Vernier scale** gives interpolated measurements in fractions of an inch

Retainer: used to block movable part to allow the easy transferring of a

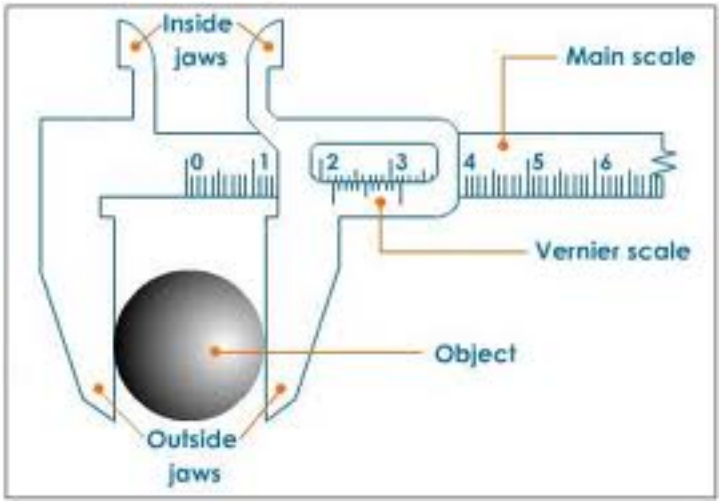

rs

[2]

[1] http://commons.wikimedia.org/wiki/File:Vernier_caliper_legends.svg

[2] http://commons.wikimedia.org/wiki/File:Vernier_caliper_legends.svg

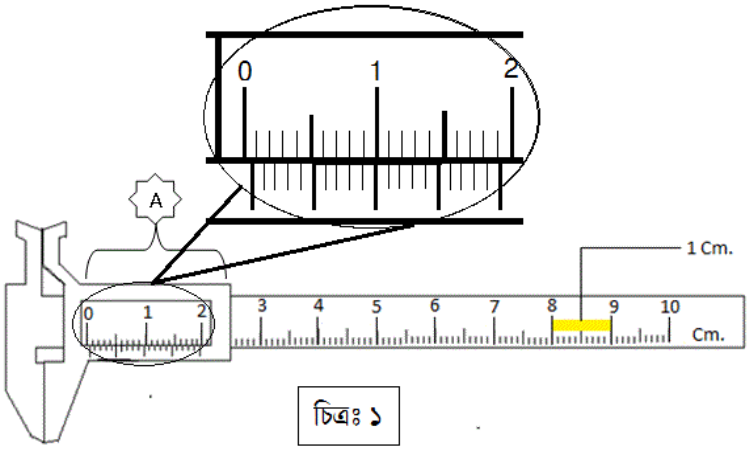

[34]

In order to get a good measurement using a caliper, the jaws of the caliper must be properly oriented around the object to be measured. Also, one must be careful about the pressure applied by the jaws when taking a measurement. Too much pressure (squeezy) and the measurement is too small; too little pressure and the measurement is too large. . A consistent, firm touch is correct and will give the operator acceptable results

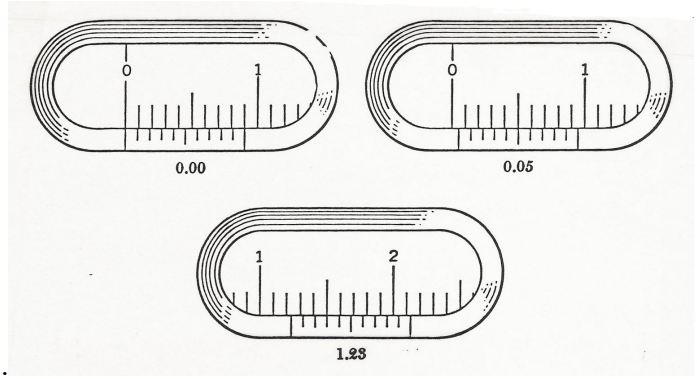

[5]

[3] http://www.srijonshil.com/qu_ans/class8/Srijonshil_Q_A_25Mar_8.php,

[4] Errors in Measurement and How to eliminate | Physics Tutorials, makox.com

[5] Vernier Scale: www.capphysics.ca - 1529 × 834 - More sizes