MACHINE TECHNOLOGY 205

READING AND USING ENGINEERING DRAWINGS

BLANK DEVELOPMENT

For Formed Sheet Metal Parts

There are many systems employed by a variety of industries (aircraft, electronics, architectural, automotive, etc.) to account for what happens in a sheet metal part when bending it from its flat blank state to Its final bent-up form: "Setbacks", "Bend Allowances" and "K Factors" are somewhat different approaches to arrive at a proper flat blank size and insure that features are correctly located on given part side after bending.

The system illustrated here is one developed by staff of a former precision manufacturer in Berkeley, CA. It has proven over many decades, when doing "coin" bending, to produce extremely accurate and reliable results .*

** Please Note: The following formulas for right-angle bends assume a bending process called "coin" (or," bottom") bending ... as opposed to "air" bending.*

d a baruch

DIMENSIONING WITH NON-90 DEGREE BENDS

Extension Line Dimensioning

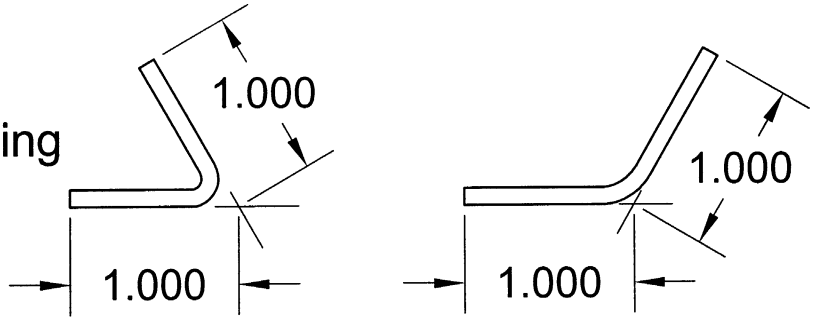

Tangential Dimensioning

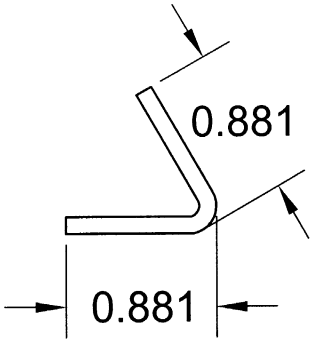

Illustrated here is the development of a blank for parts having a standard 90 deg. bend.
Shown is a common dimensioning method and calculation of a Setback (bend deduction) *

SB = Setback: The amount to be subtracted from the sum of the outside dimensions of the two legs of the bent part; the object is to determine the correct length of the flat blank in preparation for bending. The formula for this is
SB = .43r + 1.372t

r = The radius on the inside curve of the bend.

t = The thickness of the sheet or plate

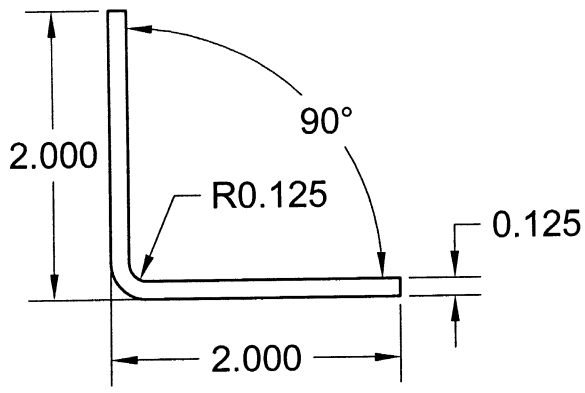

Developing the flat blank length for the above drawn part:
Calculate the Setback and then subtract it from the sum of two outside dimensions as follows -

Where r = .125 and t = .125,

SB = .43 (.125) + 1.372 (.125)
= .0538 + .1715
= .225

Then 2.000
+2.000

= 4.000
- .225

= 3.775 This is the length of the flat blank.

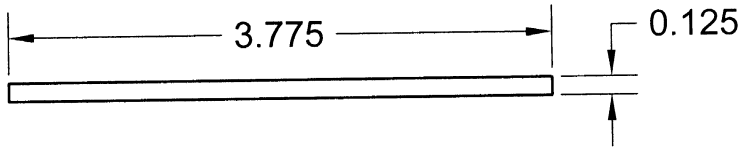

In example #2 of flat blank development, everything is the same as example #1 except the metal thickness ("t" now = .062) :

EXAMPLE 2

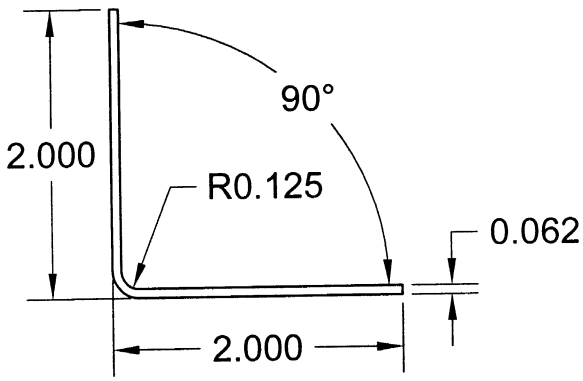

EXAMPLE 3

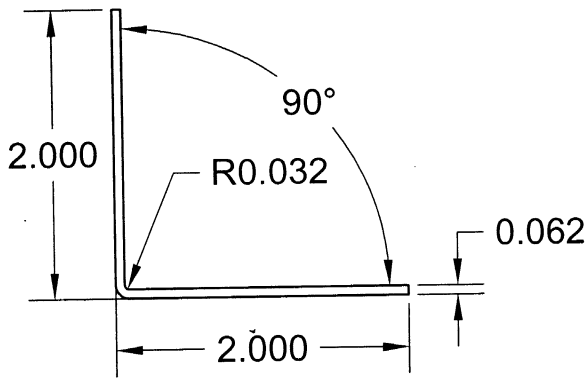

EXAMPLE #2

SB = .43 (.125) + 1.372 (.062)

= .0538 + .0851

= .139

Then 2.000
+2.000

= 4.000
- .139

= 3.861 This is the length of the flat blank.

EXAMPLE #3

SB = .43 (.032) + 1.372 (.062)

= .014 + .0851

= .099

Then 2.000
+2.000

= 4.000
- .099

= 3.901 This is the length of the flat blank.

NON-90 DEG. SETBACKS - EXTENSION LINE DIMENSIONING

$$SB = 2(r + t) \tan(a/2) - 2\pi(r + .4t) \quad a/360$$

a = Angle of bend, specifically the angle of deflection - in other words, the amount of bend away from the 180 o starting point. (To find the deflected angles in these examples, subtract the included angles shown from 180 o) .

r = The radius on the inside curve of the bend.

t = The thickness of the sheet or plate

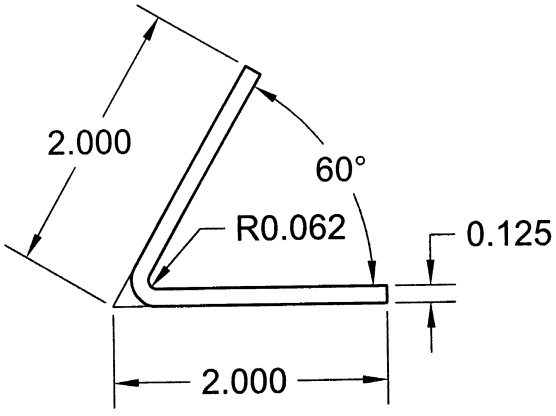

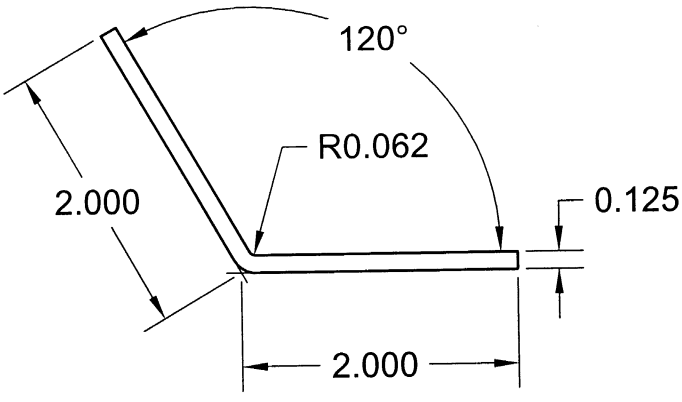

NON-90 DEG, SETBACKS - TANGENT LINE DIMENSIONING

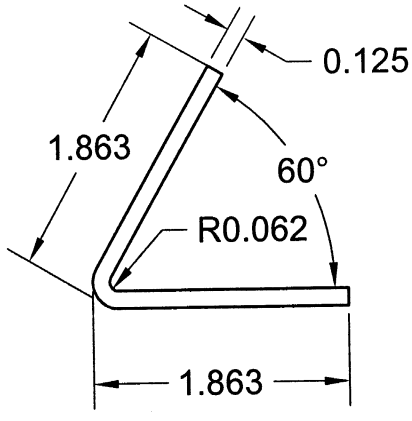

$$SB = 2(r + t) - (r + .4t) \quad A \quad / \quad 57.3$$

Calculate: 1.863 + 1.863 - SB

NAME _____

CALCULATE FLAT BLANK LENGTHS WITH THE FORMULA
SB = .43r + 1.372t

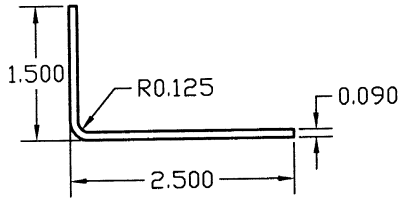

1 _____

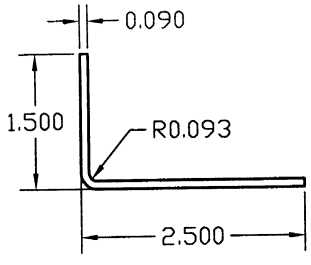

2 _____

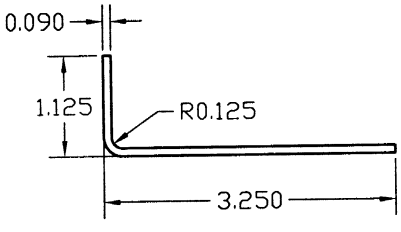

3 _____

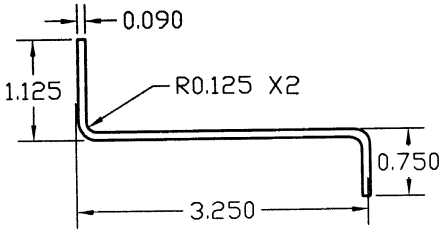

4 _____

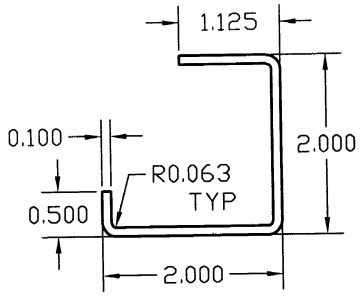

5 _____

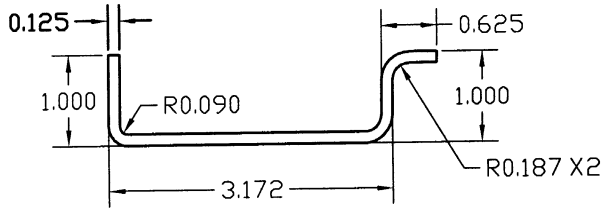

6 _____

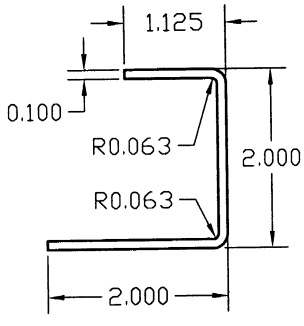

7 _____

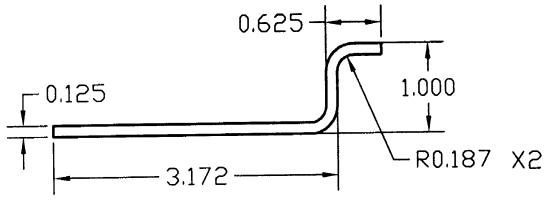

8 _____

Blank Devel.
dab - 5 4 2013

Calculate the flat-blank location of the center of the hole grid in the X & Y axes from the indicated reference edges:

X= _____ Y= _____

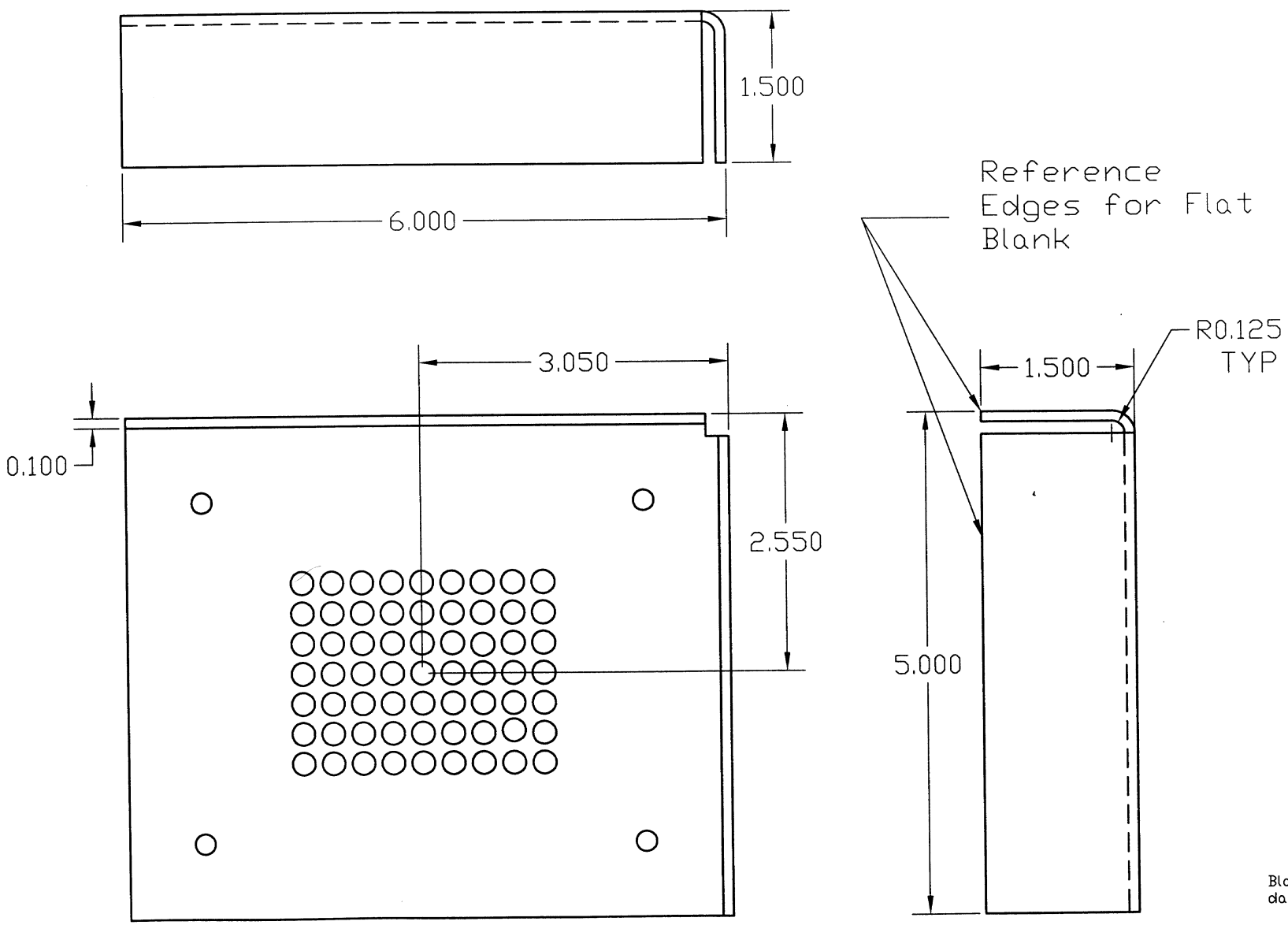

Blank Devel.
dab - 5 4 2013